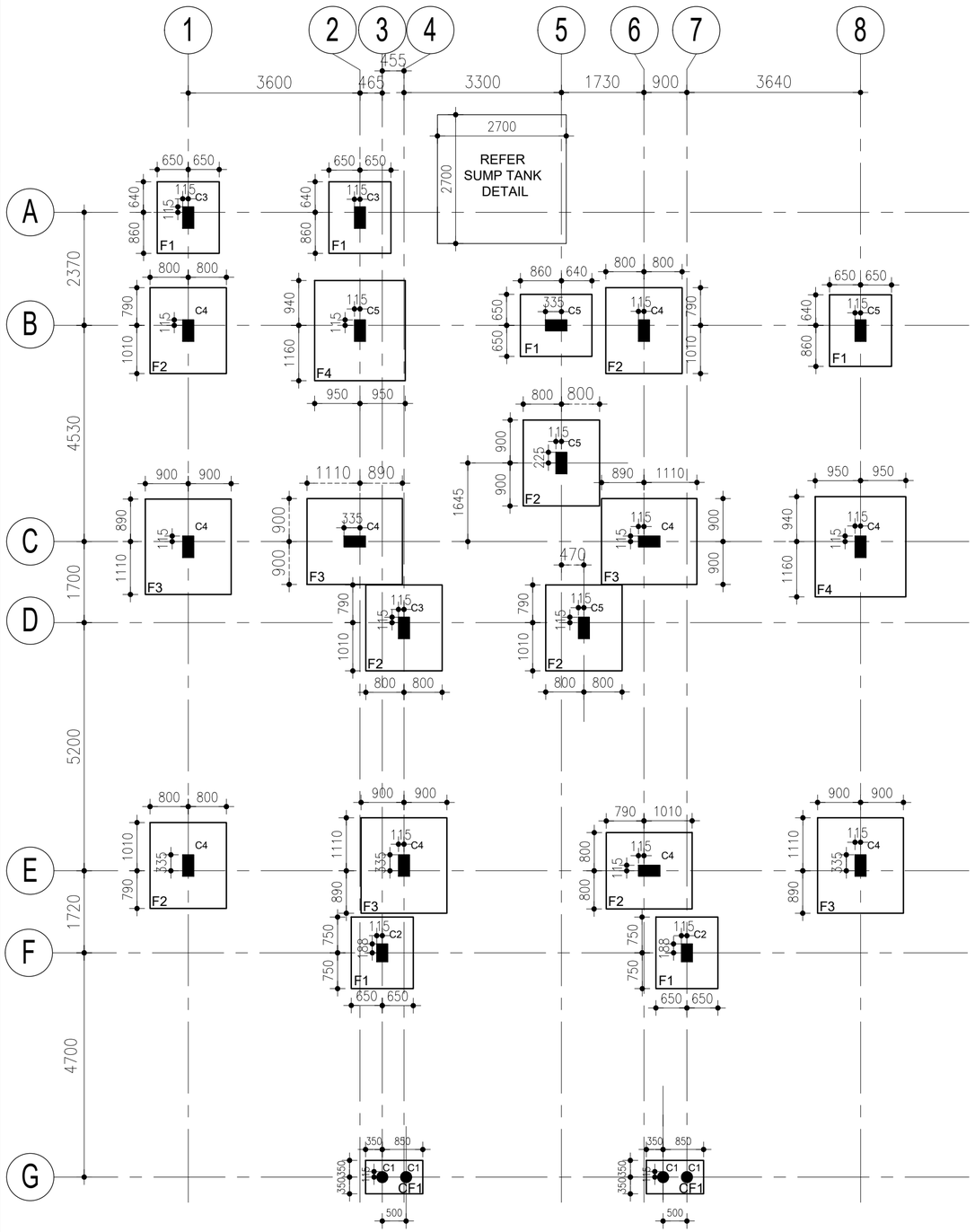

1 FOUNDATION LAYOUT

SCALE 1:75

NOTES :

1. ALL FOOTINGS ARE SYMMETRICAL ABOUT COLUMN (U.N.O.).
2. FOR SETTING-OUT OF GRIDS REFER RELEVANT ARCH. SETTING-OUT DRAWING.
3. FOR EXCAVATION CONSIDER 100mm OFFSET ON EITHER SIDES.

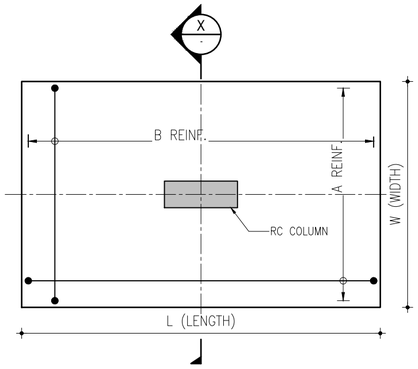

2 TYPICAL PLAN OF FOOTING

SCALE 1:25

(FOR DIMENSIONS REFER TO FOOTING SCHEDULE)

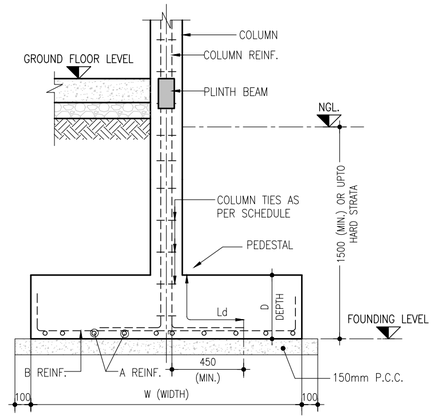

3 SECTION X

SCALE 1:25

(FOR DIMENSIONS REFER TO FOOTING SCHEDULE)

SCHEDULE OF FOOTINGS

FOOTING MARK	SIZE			BOTTOM REINFORCEMENT	
	LENGTH (L)	WIDTH (W)	DEPTH (D)	A	B
F1	1500	1300	375	Y10@150	Y10@150
F2	1800	1600	375	Y10@150	Y10@150
F3	2000	1800	375	Y10@125	Y10@125
F4	2100	1900	450	Y10@125	Y10@125
CF1	REFER PLAN 300 THK.		TOP	–	–
			BOTTOM	Y10@175	Y10@175

NOTES:

1. GRADE OF CONCRETE SHALL BE M25 FOR ALL R.C.C WORKS.
2. T/Y DENOTES HYSD TMT BARS OF GRADE Fe 500 CONFORMING TO IS 1786-1985.
3. LAP LENGTH SHALL BE 50 TIMES DIA OF THE BAR AND TO BE STAGGERED SUCH THAT NOT MORE THAN 50% OF THE BARS ARE LAPPED AT A SECTION.
4. CLEAR COVER TO THE REINFORCEMENT :
   FOOTING/WALL : 50 mm
   COLUMNS : 40 mm
   SLAB : 25 mm
   BEAM : 30 mm
5. DEVELOPMENT LENGTH SHALL BE 50 TIMES THE DIA. OF THE BAR.
6. S.B.C OF SOIL CONSIDERED IS 19.0 T/m2
7. STRUCTURE IS DESIGNED FOR GROUND +1 STORIES ONLY

FOUNDATION TO TERRACE FLOOR LVL.					
	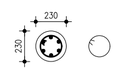 VERTICAL REINF : 6Y12 TIES : Y8@200	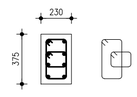 VERTICAL REINF : 8Y16 TIES : Y8@200	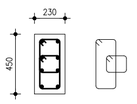 VERTICAL REINF : 8Y12 TIES : Y8@200	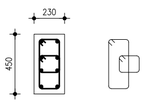 VERTICAL REINF : 8Y16 TIES : Y8@200	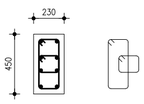 VERTICAL REINF : 4Y20(c)+4Y16 TIES : Y8@200
COLUMN MARK	C1	C2	C3	C4	C5

GENERAL NOTES:

1. DO NOT SCALE FROM THE DRAWINGS. FOLLOW WRITTEN DIMENSIONS ONLY.
2. ALL DIMENSIONS ARE IN MM AND LEVELS IN METRES UNLESS NOTED OTHERWISE.
3. ALL DIMENSIONS TO BE VERIFIED ON SITE BEFORE EXECUTION & APPROVED BY THE ENGINEER.
4. EXECUTION OF THE WORKS SHALL BE CARRIED BY QUALIFIED PERSONNEL ONLY. ANY DISCREPANCY IN SITE SHALL BE BROUGHT TO THE NOTICE OF THE CONSULTANTS PRIOR TO THE EXECUTION.

Rev.No:-	Date:	

Issued For :-

FOR INFORMATION

STRUCTURAL CONSULTANT

TECHMILLENNIALS PVT. LTD.
#10, NITK STEP,
NITK SURATHKAL,
MANGALURU - 575025

Dwg by :-	AJ	Scale :-	AM
Chk by :-	PS	Sheet size :-	A2

Client :-

Name of the Project :-

PROPOSED RESIDENTIAL BUILDING FOR Dy.CONSERVATOR OF FORESTS,MANGALORE DIVISION ,LALBAGH,MANGALORE.

DRAWING TITLE :-

FOUNDATION DETAILS

DEPARTMENT

GOVERNMENT OF KARNATAKA

DATE: 16-01-2026	DWG. NO: TMPL/02/01/26/FG/SD-001	REV: R0